Safe Operation Practices • Set-Up • Operation • Maintenance • Service • Troubleshooting • Warranty

COLUMBIA®

OPERATOR'S MANUAL

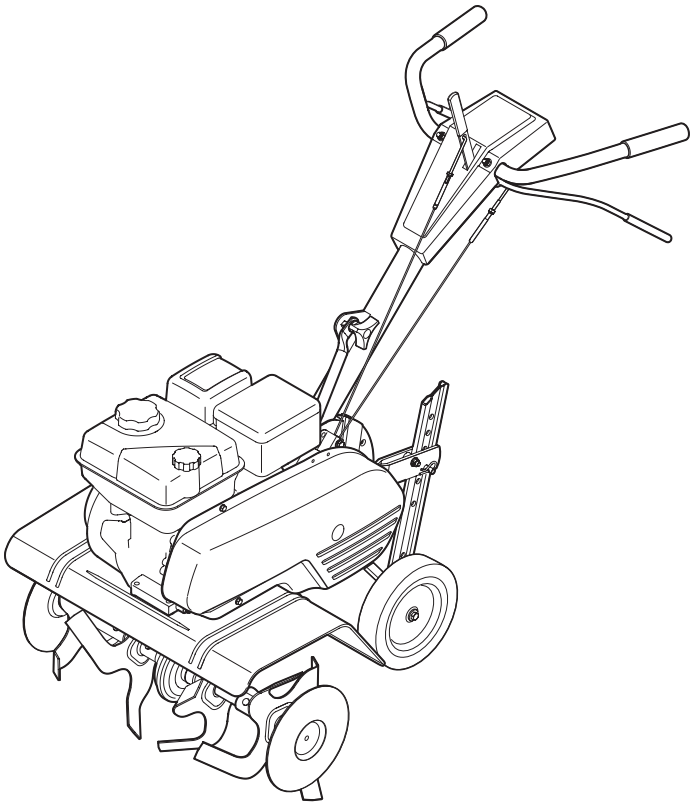

Front Tine Tiller — 390 Series

⚠ WARNING

READ AND FOLLOW ALL SAFETY RULES AND INSTRUCTIONS IN THIS MANUAL BEFORE ATTEMPTING TO OPERATE THIS MACHINE.
FAILURE TO COMPLY WITH THESE INSTRUCTIONS MAY RESULT IN PERSONAL INJURY.

LES DISTRIBUTIONS RVI LIMITÉE, 2955, JEAN-BAPTISTE DESCHAMPS, LACHINE, QUEBEC H8T 1C5
MTD LLC, P.O. BOX 361131 CLEVELAND, OHIO 44136-0019

Printed In USA

769-06899
1.22.11

To The Owner

1

Thank You

Thank you for purchasing your new equipment. It was carefully engineered to provide excellent performance when properly operated and maintained.

Please read this entire manual prior to operating the equipment. It instructs you how to safely and easily set up, operate and maintain your machine. Please be sure that you, and any other persons who will operate the machine, carefully follow the recommended safety practices at all times. Failure to do so could result in personal injury or property damage.

All information in this manual is relative to the most recent product information available at the time of printing. Review this manual frequently to familiarize yourself with the machine, its features and operation. Please be aware that this Operator's Manual may cover a range of product specifications for various models. Characteristics and features discussed and/or illustrated in this manual may not be applicable to all models.

The manufacturer reserves the right to change product specifications, designs and equipment without notice and without incurring obligation.

If you have any problems or questions concerning the machine, phone your local service dealer or contact us directly. Customer Support telephone numbers, website address and mailing address can be found on this page. We want to ensure your complete satisfaction at all times.

Throughout this manual, all references to *right* and *left* side of the machine are observed from the operating position.

The engine manufacturer is responsible for all engine-related issues with regards to performance, power-rating, specifications, warranty and service. Please refer to the engine manufacturer's Owner's/Operator's Manual, packed separately with your machine, for more information.

Table of Contents

Safe Operation Practices 3
Assembly & Set-Up 6
Controls & Features 9
Operation 10
Maintenance & Adjustment 12
Service 14
Troubleshooting 16
Replacement Parts 17
Warranty 22

Record Product Information

Before setting up and operating your new equipment, please locate the model plate on the equipment and record the information in the provided area to the right. You can locate the model plate by standing at the operating position and looking down at the rear of the machine. This information will be necessary, should you seek technical support via our web site or with your local dealer.

MODEL NUMBER

☐☐☐☐☐☐☐☐☐☐☐

SERIAL NUMBER

☐☐☐☐☐☐☐☐☐☐☐

Customer Support

If you have difficulty assembling this product or have any questions regarding the controls, operation, or maintenance of this machine, call an authorized dealer, see below.

Please have your unit's model number and serial number ready when you call. See previous section to locate this information.

In the U.S.A.:
MTD LLC at P.O. Box 361131, Cleveland, Ohio 44136-0019. Phone: 1-877-282- 8684.
In Canada:
MTD Canada, 97 Kent Avenue, Kitchener, ON N2G 4J1 Phone: 1-800-668-1238 or
LES DISTRIBUTIONS RVI LIMITÉE, 2955, Jean-Baptiste Deschamps, Lachine, Quebec H8T 1C5 Phone: 1-800-361-5770.

Important Safe Operation Practices

2

WARNING! This symbol points out important safety instructions which, if not followed, could endanger the personal safety and/or property of yourself and others. Read and follow all instructions in this manual before attempting to operate this machine. Failure to comply with these instructions may result in personal injury.
When you see this symbol. **HEED ITS WARNING!**

DANGER! This machine was built to be operated according to the safe operation practices in this manual. As with any type of power equipment, carelessness or error on the part of the operator can result in serious injury. This machine is capable of amputating fingers, hands, toes and feet. Failure to observe the following safety instructions could result in serious injury or death.

Training

1. Read, understand, and follow all instructions on the machine and in the manual(s) before attempting to assemble and operate. Keep this manual in a safe place for future and regular reference and for ordering replacement parts.
2. Be familiar with all controls and their proper operation. Know how to stop the machine and disengage them quickly.
3. Never allow children under 14 years of age to operate this machine. Children 14 and over should read and understand the instructions and safe operation practices in this manual and on the machine and be trained and supervised by an adult.
4. Never allow adults to operate this machine without proper instruction.
5. Keep the area of operation clear of all persons, particularly small children and pets. Stop machine if anyone enters the area.

Preparation

1. Thoroughly inspect the area where the equipment is to be used. Remove all stones, sticks, wire, and other foreign objects which could be tripped over and cause personal injury.
2. Wear sturdy, rough-soled work shoes and close fitting slacks and shirt. Loose fitting clothes or jewelry can be caught in moving parts. Never operate this machine in bare feet or sandals.
3. Disengage clutch levers and shift (if provided) into neutral ("N") before starting the engine.
4. Never leave this machine unattended with the engine running.
5. Never attempt to make any adjustments while engine is running, except where specifically recommended in the operator's manual.

Safe Handling of Gasoline:

To avoid personal injury or property damage use extreme care in handling gasoline. Gasoline is extremely flammable and the vapors are explosive. Serious personal injury can occur when gasoline is spilled on yourself or your clothes which can ignite. Wash your skin and change clothes immediately.

a. Use only an approved gasoline container.
b. Never fill containers inside a vehicle or on a truck or trailer bed with a plastic liner. Always place containers on the ground away from your vehicle before filling.
c. When practical, remove gas-powered equipment from the truck or trailer and refuel it on the ground. If this is not possible, then refuel such equipment on a trailer with a portable container, rather than from a gasoline dispenser nozzle.
d. Keep the nozzle in contact with the rim of the fuel tank or container opening at all times until fueling is complete. Do not use a nozzle lock-open device.
e. Extinguish all cigarettes, cigars, pipes and other sources of ignition.
f. Never fuel machine indoors.
g. Never remove gas cap or add fuel while the engine is hot or running. Allow engine to cool at least two minutes before refueling.
h. Never over fill fuel tank. Fill tank to no more than ½ inch below bottom of filler neck to allow space for fuel expansion.
i. Replace gasoline cap and tighten securely.
j. If gasoline is spilled, wipe it off the engine and equipment. Move unit to another area. Wait 5 minutes before starting the engine.
k. To reduce fire hazards, keep machine free of grass, leaves, or other debris build-up. Clean up oil or fuel spillage and remove any fuel soaked debris.

l. Never store the machine or fuel container inside where there is an open flame, spark or pilot light as on a water heater, space heater, furnace, clothes dryer or other gas appliances.

Operation

1. Do not put hands or feet near rotating parts. Contact with the rotating parts can amputate hands and feet.
2. Do not operate machine while under the influence of alcohol or drugs.
3. Never operate this machine without good visibility or light. Always be sure of your footing and keep a firm hold on the handles.
4. Keep bystanders away from the machine while it is in operation. Stop the machine if anyone enters the area.
5. Be careful when tilling in hard ground. The tines may catch in the ground and propel the tiller forward. If this occurs, let go of the handle bars and do not restrain the machine.
6. Exercise extreme caution when operating on or crossing gravel surfaces. Stay alert for hidden hazards or traffic. Do not carry passengers.
7. Never operate the machine at high transport speeds on hard or slippery surfaces.
8. Exercise caution to avoid slipping or falling.
9. Look down and behind and use care when in reverse or pulling machine towards you.
10. Start the engine according to the instructions found in this manual and keep feet well away from the tines at all times.
11. After striking a foreign object, stop the engine, disconnect the spark plug wire and ground against the engine. Thoroughly inspect the machine for any damage. Repair the damage before starting and operating.
12. Disengage all clutch levers (if fitted) and stop engine before you leave the operating position (behind the handles). Wait until the tines come to a complete stop before unclogging the tines, making any adjustments, or inspections.
13. Never run an engine indoors or in a poorly ventilated area. Engine exhaust contains carbon monoxide, an odorless and deadly gas.
14. Muffler and engine become hot and can cause a burn. Do not touch.
15. Use caution when tilling near fences, buildings and underground utilities. Rotating tines can cause property damage or personal injury.
16. Do not overload machine capacity by attempting to till soil too deep at too fast of a rate.
17. If the machine should start making an unusual noise or vibration, stop the engine, disconnect the spark plug wire and ground it against the engine. Inspect thoroughly for damage. Repair any damage before starting and operating.
18. Keep all shields, guards, and safety devices in place and operating properly.
19. Never pick up or carry machine while the engine is running.
20. Use only attachments and accessories approved by the manufacturer. Failure to do so can result in personal injury.
21. If situations occur which are not covered in this manual, use care and good judgement. Contact Customer Support for assistance and the name of you nearest servicing dealer..

Maintenance & Storage

1. Keep machine, attachments and accessories in safe working order.
2. Allow a machine to cool at least five minutes before storing. Never tamper with safety devices. Check their proper operation regularly.
3. Check bolts and screws for proper tightness at frequent intervals to keep the machine in safe working condition. Also, visually inspect machine for any damage.
4. Before cleaning, repairing, or inspecting, stop the engine and make certain the tines and all moving parts have stopped. Disconnect the spark plug wire and ground it against the engine to prevent unintended starting.
5. Do not change the engine governor settings or over-speed the engine. The governor controls the maximum safe operating speed of engine.
6. Maintain or replace safety and instruction labels, as necessary.
7. Follow this manual for safe loading, unloading, transporting, and storage of this machine.
8. Always refer to the operator's manual for important details if the machine is to be stored for an extended period.
9. If the fuel tank has to be drained, do this outdoors.
10. Observe proper disposal laws and regulations for gas, oil, etc. to protect the environment.
11. According to the Consumer Products Safety Commission (CPSC) and the U.S. Environmental Protection Agency (EPA), this product has an *Average Useful Life* of seven (7) years, or 130 hours of operation. At the end of the *Average Useful Life* have the machine inspected annually by an authorized service dealer to ensure that all mechanical and safety systems are working properly and not worn excessively. Failure to do so can result in accidents, injuries or death.

Notice Regarding Emissions

Engines which are certified to comply with California and federal EPA emission regulations for SORE (Small Off Road Equipment) are certified to operate on regular unleaded gasoline, and may include the following emission control systems: Engine Modification (EM), Oxidizing Catalyst (OC), Secondary Air Injection (SAI) and Three Way Catalyst (TWC) if so equipped.

Spark Arrestor

WARNING! This machine is equipped with an internal combustion engine and should not be used on or near any unimproved forest-covered, brushcovered or grass-covered land unless the engine's exhaust system is equipped with a spark arrester meeting applicable local or provincial laws (if any).

If a spark arrester is used, it should be maintained in effective working order by the operator. A spark arrester for the muffler is available through your nearest engine authorized service dealer.

Safety Symbols

This page depicts and describes safety symbols that may appear on this product. Read, understand, and follow all instructions on the machine before attempting to assemble and operate.

Symbol	Description
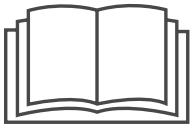	READ THE OPERATOR'S MANUAL(S) Read, understand, and follow all instructions in the manual(s) before attempting to assemble and operate
	WARNING— ROTATING TINES Do not put hands or feet near rotating parts. Contact with the rotating parts can amputate hands and feet.
	WARNING— ROTATING TINES Do not put hands or feet near rotating parts. Contact with the rotating parts can amputate hands and feet.
	WARNING—GASOLINE IS FLAMMABLE Allow the engine to cool at least two minutes before refueling.
	WARNING— CARBON MONOXIDE Never run an engine indoors or in a poorly ventilated area. Engine exhaust contains carbon monoxide, an odorless and deadly gas.
	WARNING— HOT SURFACE Engine parts, especially the muffler, become extremely hot during operation. Allow engine and muffler to cool before touching.

WARNING: Your Responsibility—Restrict the use of this power machine to persons who read, understand and follow the warnings and instructions in this manual and on the machine.

SAVE THESE INSTRUCTIONS!

Contents of Carton

- One Tiller
- One Operator's Manual
- One Handlebar Assembly
- One Engine Operator's Manual
- One Depth Gauge Assembly
- One 20 oz. Bottle SAE30 Oil

Assembly

References to the right and left side of tiller are determined from behind the equipment in the operating position.

Handle

1. Identify the forward clutch cable and reverse clutch cables. Fig. 3–1.

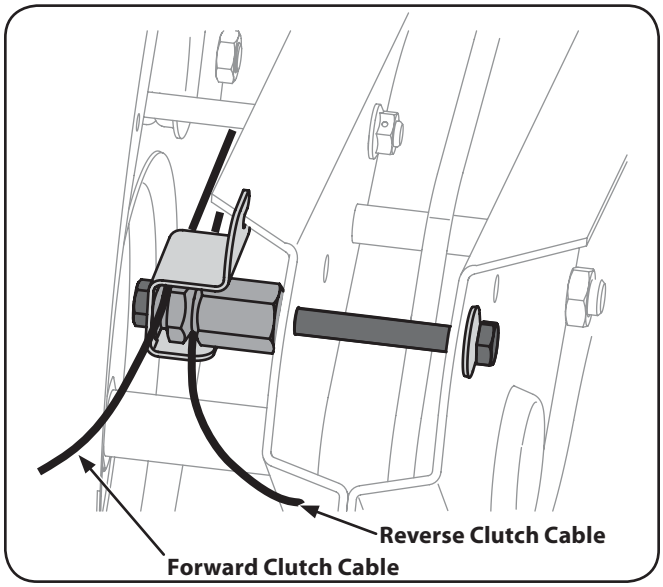

Figure 3-1

NOTE: Be sure not to kink cables while attaching.

2. Hook the "Z" end of the forward clutch cable (A) into the forward tine engagement lever Fig. 3–2.

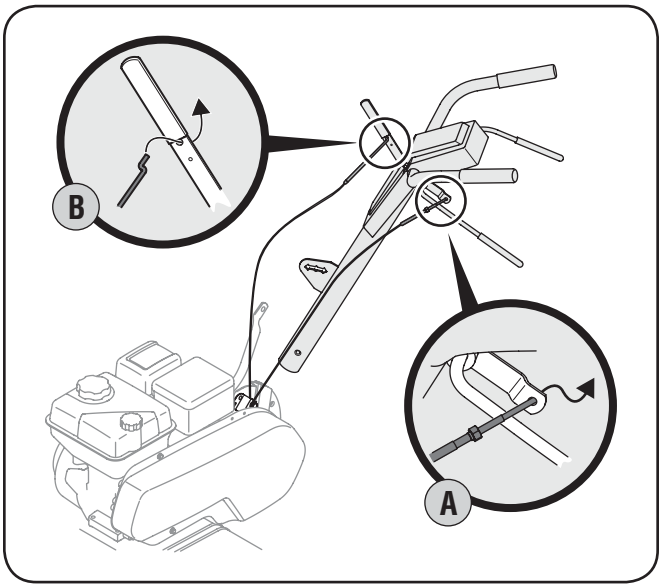

Figure 3-2

3. Hook the "Z" end of the reverse clutch cable (B) into the reverse tine engagement lever Fig. 3–2.

4. Remove the hex bolt and cupped washer from the right side of the frame. Hold the cable guide bracket on the left side of the frame as it will fall when the bolt is removed. Step 1 in Fig. 3–3.

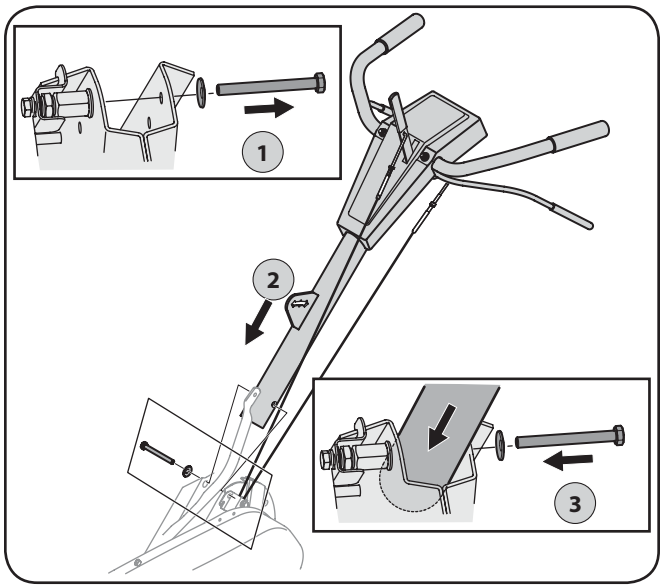

Figure 3-3

5. Insert the handle into the tiller frame as shown. Step 2 in Fig. 3–3.
6. Insert the bolt through the cupped washer, frame, handle and into the cable guide bracket (note the notch in the cable guide bracket goes over the flange on the frame.) Step 3 in Fig. 3–3.
7. Tighten the bolt securely after securing the handle brace as seen in Fig. 3–4.

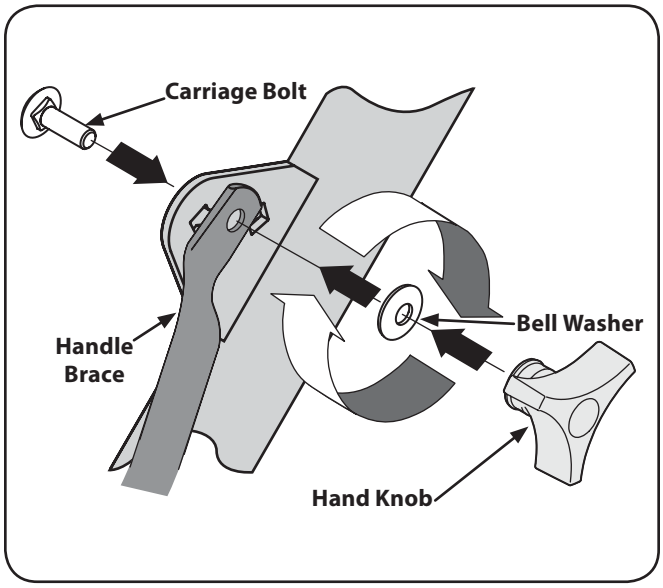

Figure 3-4

8. Locate the carriage bolt, bell washer and hand knob packed with your tiller.
9. Insert the carriage bolt through the welded bracket on the handle, bell washer, handle brace and into the hand knob. See Fig. 3–4.
10. Select one of the three handle height positions (three notches in the welded handle bracket) and tighten the hand knob to secure the handle in the desired position. Fig. 3–4. Return to the lower handle and tighten the hex bolt securely.

Depth Gauge

1. Disassemble the depth gauge assembly as seen in Fig. 3–5. Retain the pin and clip for later reassembly.

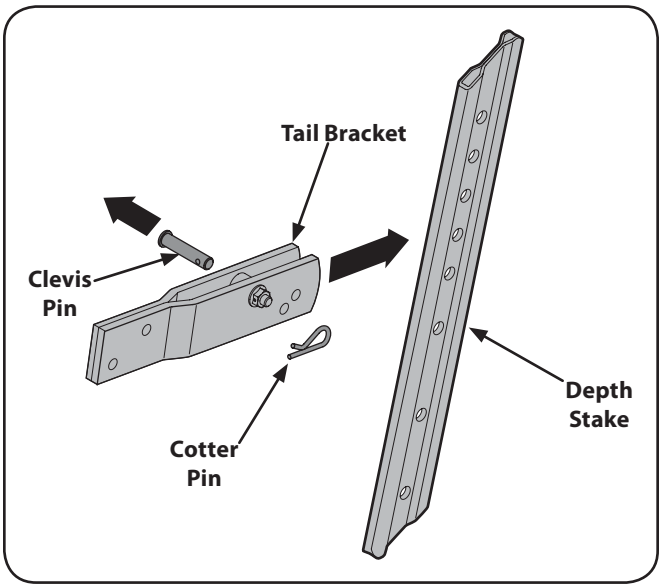

Figure 3-5

2. Remove the two screws from the tail bracket as shown in Fig. 3–6.

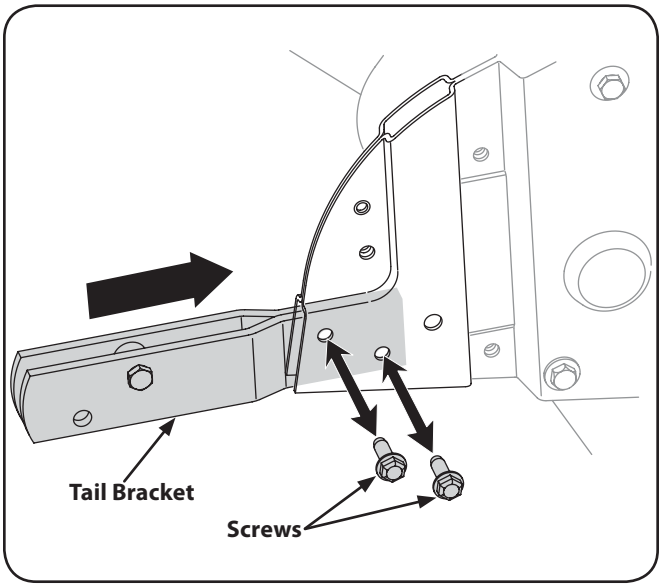

Figure 3-6

3. Insert the depth gauge bracket into the frame and reinstall the two screws removed earlier. Tighten the hex bolts securely. See Fig. 3–6.

4. Insert the depth stake into the depth gauge bracket assembly as seen in Fig. 3–7.

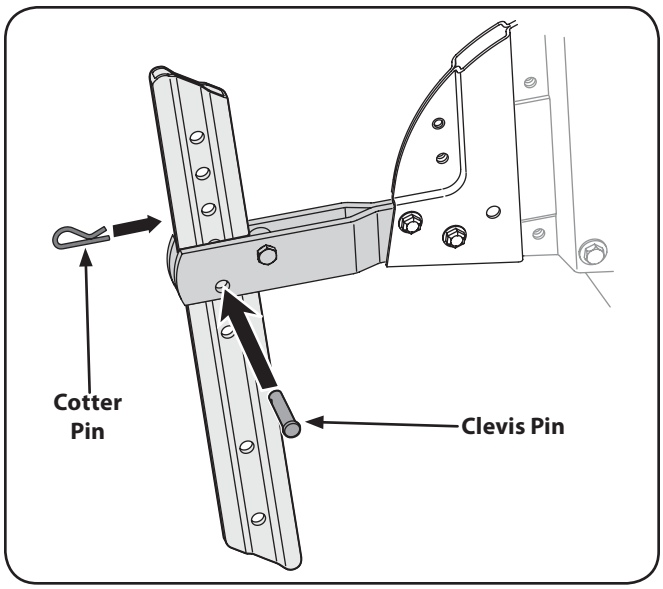

Figure 3-7

5. Secure the pin with the clip removed earlier. The depth stake can be placed at various positions. For setup purposes it is suggested that the depth stake be assembled with the stake just above or level with the ground surface. For further instructions on the Depth Stake refer to the Maintenance & Adjustments Section of this manual.

Adjustments

Wheels

The tiller is shipped with the wheels adjusted so that the machine sits level. The wheels need to be adjusted to meet your tilling needs before operation. This adjustment is made by removing the clevis pin from the wheel yoke and raising the wheels to the desired height. See Fig. 3-8.

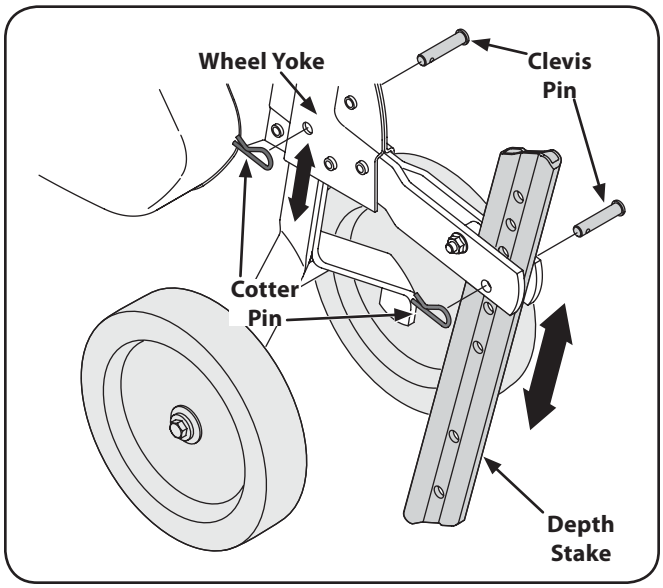

Figure 3-8

Set-Up

Gas & Oil Fill-Up

Service the Engine with gasoline and oil as instructed in the separate Engine Operator's Manual packed with your tiller. Read the instructions carefully.

WARNING! Use extreme care when handling gasoline. Gasoline is extremely flammable and the vapors are explosive. Never fuel the machine indoors or while the engine is hot or running.

Controls & Features

4

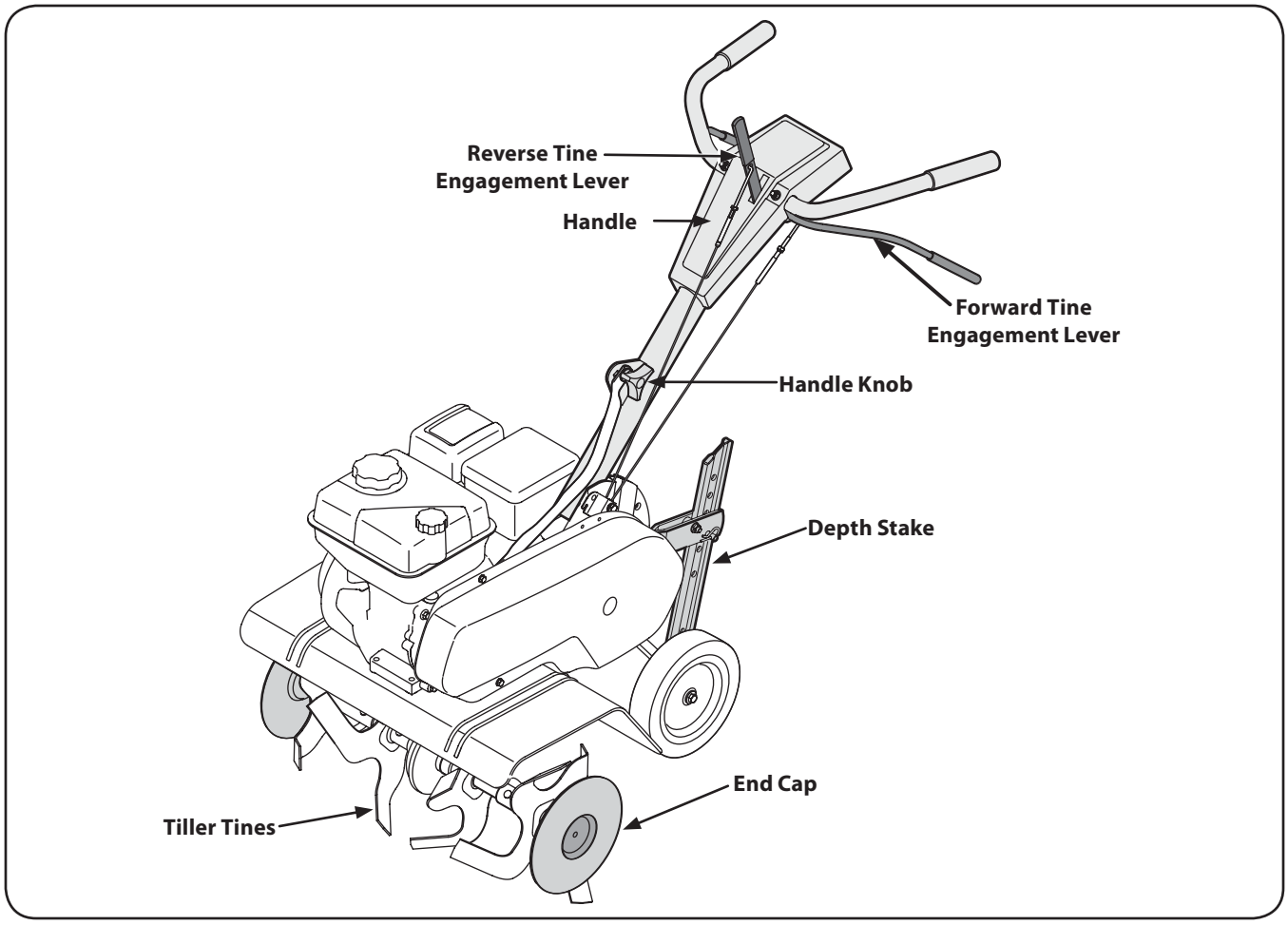

Figure 4-1

Engine Controls

See the separate Engine Operator's Manual for information and functions of the engine controls.

Forward Tine Engagement Lever

The forward tine control lever is located beneath the upper section of the handle. Squeezing the lever against the handle engages the tine drive. Release the lever to stop the tines.

Reverse Tine Engagement Lever

The reverse tine control lever is located on top of the upper section of the handle. Pulling the lever toward operator engages the tines in reverse. Release the lever to stop the tines.

NOTE: Never engage both the forward and reverse tine drives at the same time. Engaging both forward and reverse tine drives at the same time could damage the belt drives and cause the engine to stall.

Depth Stake

The depth stake controls the tilling depth.

Tines and End Caps

Tilling tines and end caps are used to cultivate, furrow and prepare your garden for seeding. End caps are used to avoid tilled soil from overflowing onto unwanted areas.

Handle Knob

The handle height may be adjusted. Loosen the knob to change the position. Tighten hardware when complete.

Starting & Stopping Engine

Refer to the Engine Operator's manual packed with your tiller for instructions on starting and stopping the engine.

WARNING! Read, understand, and follow all the instructions and warnings posted on the machine and in this manual before operating.

WARNING! Be sure no one is standing in front of the tiller while the engine is running or being started.

1. Make sure that the tine clutch control is disengaged.

Setting the Depth

Yoke Forward

Place the wheel yoke so that wheels are forward (nearest to tines) for shallow tilling, cultivating and transport. See Fig. 5-1.

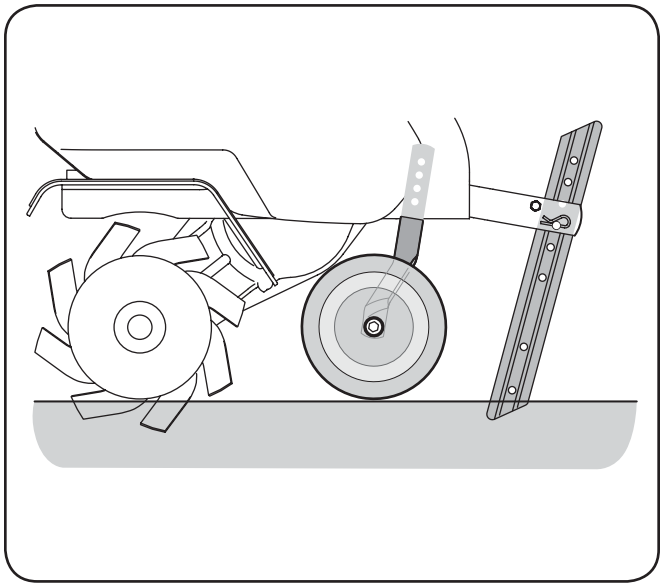

Figure 5-1

Yoke to Back

Place the wheel yoke so that wheels are toward the rear — closest to depth stake — for deep tilling and cultivating. See Fig. 5-2.

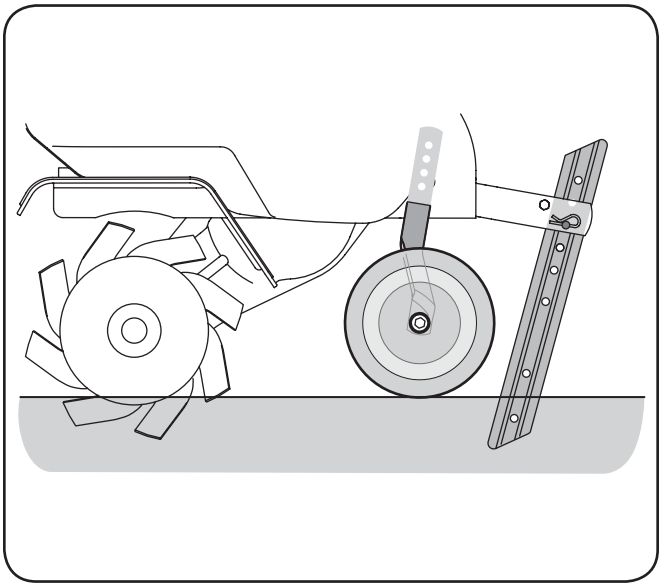

Figure 5-2

Depth Stake

The depth stake acts as a brake for the tiller and controls the depth and speed at which the machine will operate. Remove the clevis pin and hairpin clip to raise or lower depth stake. See Fig. 5-3.

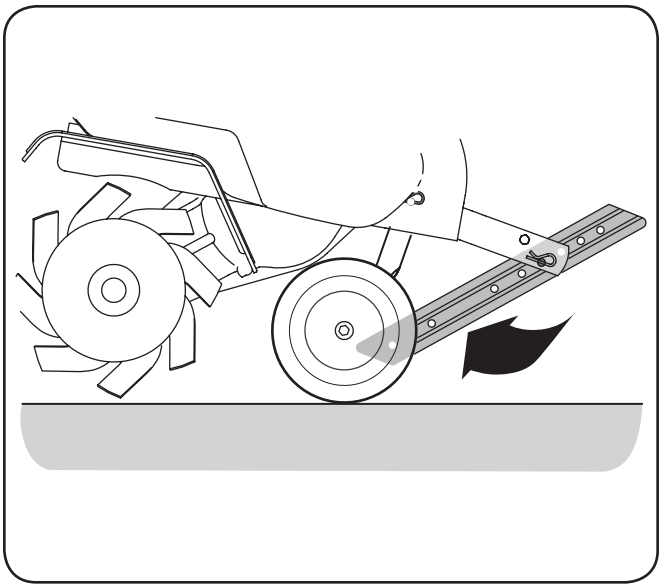

Figure 5-3

Handle Pressure

Further control of the tilling depth and travel speed can be obtained by variation of pressure on the handles.

A downward pressure on the handles will reduce the working depth and increase the forward speed. An upward pressure on the handles will increase the working depth and reduce the forward speed.

The type of soil and working conditions will determine the actual setting of the depth stake and the handle pressure required.

Transporting and Storing the Tiller

To transport and store the tiller move the throttle to the stop position. Pivot the depth stake away from ground up between wheels. See Fig. 5-3.

Using Your Tiller

Your tiller is designed for seed bed preparation, cultivating, furrowing and mulching.

Tilling Procedure

When tilling, leave approximately eight inches of untilled soil between the first and second tilling paths, then make the third path between the first and second, Fig. 5-4.

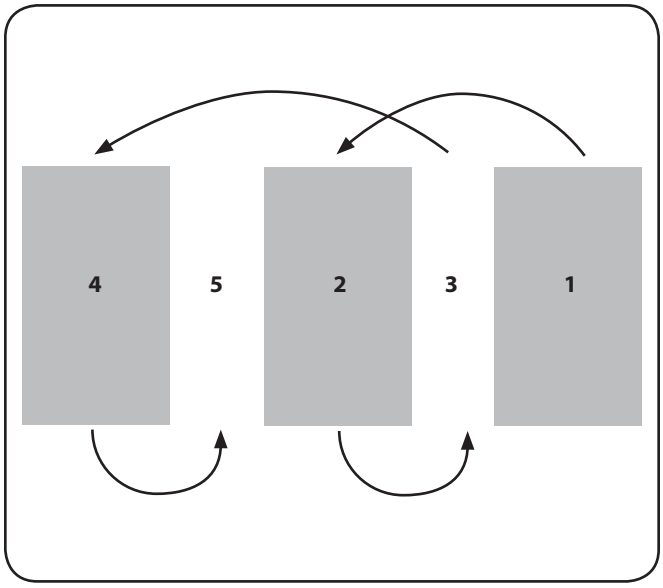

Figure 5-4

In some soils, the desired depth is obtained the first time over the garden. In other soils, the desired depth is obtained by going over the garden two or three times. Passes should be made across the length and width of the garden alternately. Rocks which are turned up should be removed from the garden area.

Cultivating Procedures

For cultivating, a two to three inch depth is desirable. The tine width can be reduced to 13 inches by removing the outer tines completely from the tiller. See the Maintenance & Adjustments Section for instructions on removing the tines.

When laying out plant rows, be sure to allow enough width to permit cultivation between the rows. In growing corn or similar crops, check-row planting will permit cross cultivation and practically eliminate hand hoeing. See Fig. 5-5.

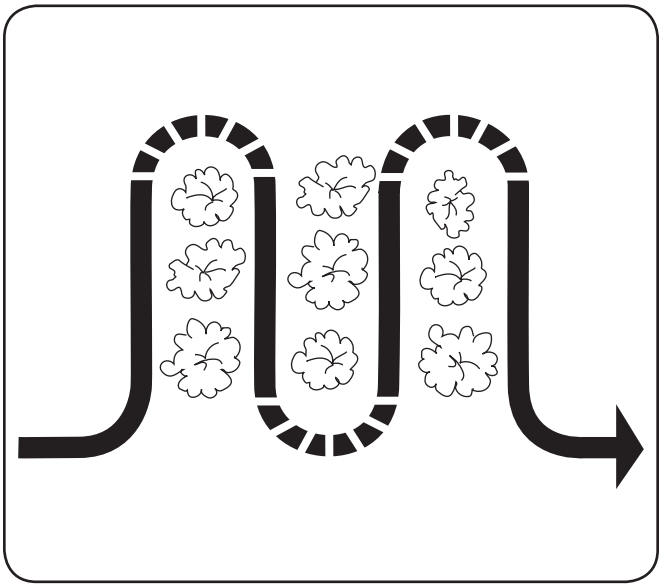

Figure 5-5

Other Uses

The tiller has many uses other than tilling and cultivating a garden. One of these is the preparation of lawn area for seeding. The tiller will prepare a deep seed bed which will be free of hard untilled spots, allowing a better stand of grass to grow. The tiller is very useful for loosening hard soil for excavation with a shovel; No tedious handwork will be necessary. Your tiller may be used for mixing compost in the pile or for mixing it with the soil in your garden. This should be done after the soil has been broken to the full working depth. The compost should be worked in to a depth of six to seven inches. This may be done by working the length of the garden and then by making separate passes across its width. The addition of decayed organic matter will substantially increase the fertility of your garden. For proper decaying action, fertilizer should be applied and worked in with the mulch materials. Breaking up leaves and straw and mixing it with several inches of soil allows proper aeration of the plant root system and retards the growth of weeds.

WARNING! Disconnect the spark plug wire and ground it against the engine before performing any repairs.

Maintenance

Engine

Refer to the separate Engine Operator's Manual for engine maintenance instructions.

Tines

Clean the underside of the tine shield after each use. The dirt washes off the tines easier if rinsed off immediately instead of after it dries. Always towel dry the tiller afterwards and apply a light coat of oil or silicone to prevent rusting or water damage.

NOTE: Never use a "pressure washer" to clean your tiller. Water can penetrate tight areas of the tiller and its chain case and cause serious damage to machine.

Lubrication

Pivot Points

Remove the belt cover and lubricate all the pivot points and linkages at least once a season with light oil. Keep the belts free of lubrication.

Tine Shafts

Remove the tine assemblies and lubricate the tine shafts at least once a season.

Wheel Shafts

Remove the wheel assemblies and lubricate the axle shafts at least once a season.

Chain Drive

The chain drive is pre-lubricated and sealed at factory.

Adjustments

Cable Adjustment

From time to time you may need to adjust the tension on the forward and reverse tine engagement cables. See Fig. 6-1.

1. Disconnect and ground the spark plug wire against the engine.
2. Adjust either the forward or reverse clutch cable by loosening the hex nut. See Fig. 6-2.
3. Turn the cable collar section one or two turns to increase or decrease tension on the cable. See Fig. 6-3.

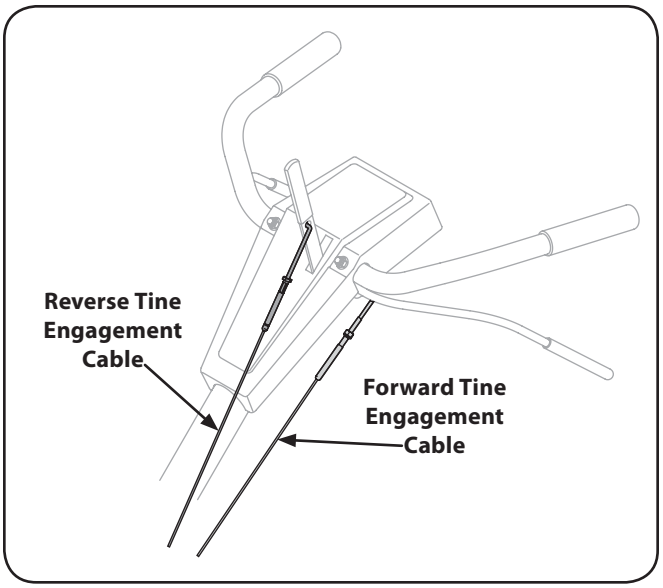

Figure 6-1

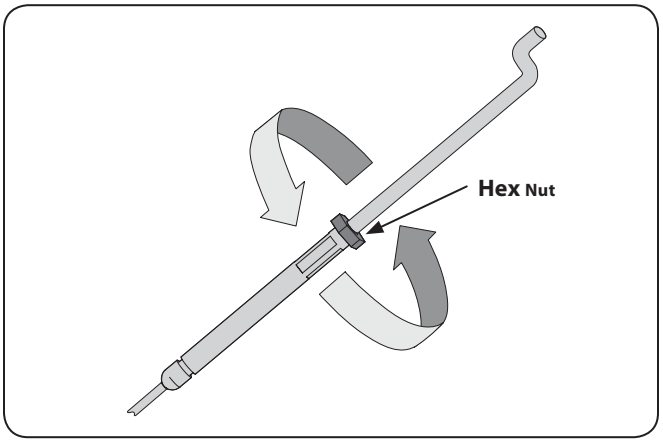

Figure 6-2

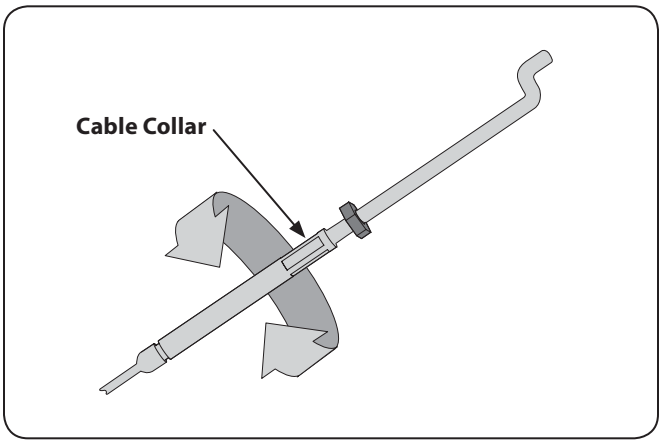

Figure 6-3

4. Retighten the lock nut against the cable collar. See Fig. 6-4.

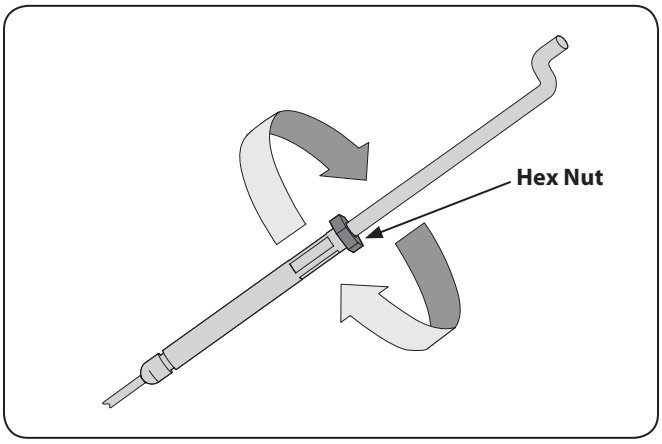

Figure 6-4

5. With the forward and reverse tine engagement handles in neutral — released — position, pull the starter rope several times. The tines should not turn.
6. If they turn forward, adjust the forward tine engagement cable to release tension using the previous steps in this section. If the tines turn toward rear, adjust the reverse tine engagement cable to lesson the tension as with previous steps.
7. Check again for correct tension on cables.

End Caps

The end cap, which is used to prevent tilled soil from overflowing onto unwanted areas, are removable from the axle. Remove the hairpin clip and clevis pin that secure each end cap and slide the end caps off the axle. See Fig. 6-5.

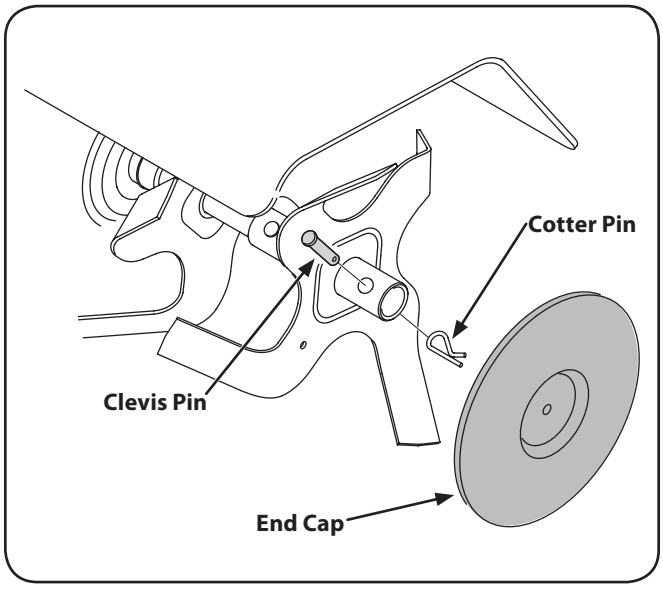

Figure 6-5

Tines

With the outer tines installed, the working width of the machine is 24 inches. This width may be expanded to 26 inches by removing the clevis and cotter pins, sliding each outer tine outward away from the center of the tiller and securing the pins in the holes provided. See Fig. 6-6.

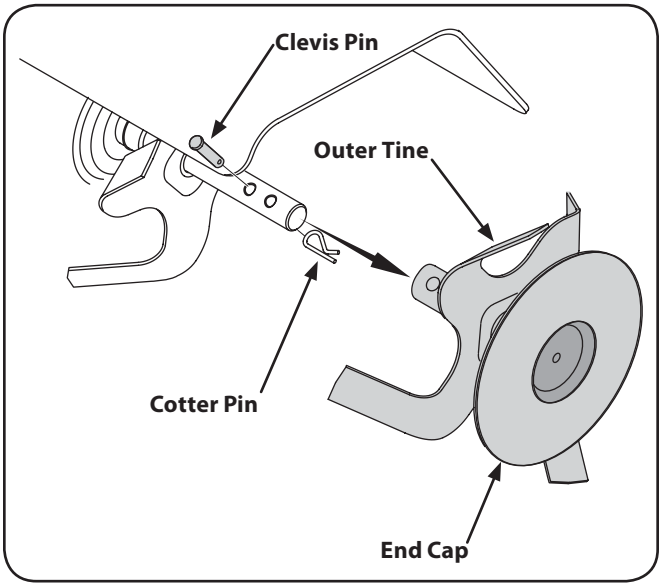

Figure 6-6

Off-Season Storage

If the tiller will not be used for a period longer than 30 days, the following steps should be taken to prepare the tiller for storage.

1. Clean the exterior of the engine and the entire tiller thoroughly. Lubricate the tiller as described in the lubrication instructions.
2. The use of pressure washers is not recommended for cleaning your tiller. They may cause damage to electric components, spindles, pulleys, bearings or the engine. The use of pressure washers will result in shortened life and reduce serviceability.
3. Refer to the engine manual for correct engine storage instructions.
4. Wipe tines with oiled rag to prevent rust.
5. Store tiller in a clean, dry area. Do not store next to corrosive materials, such as fertilizer.

   NOTE: When storing any type of power equipment in an unventilated area or metal storage shed, care should be taken to rustproof the equipment. Using a light oil or silicone, coat the equipment and especially any springs, bearings, and cables.

Belt Replacement

Reverse Drive Belt

Your tiller has been engineered with a belt made of special material (Kevlar Tensile) for longer life and better performance. It should not be replaced with an off-the-shelf belt. Order all belts through you authorized service dealer.

1. Disconnect and ground the spark plug wire against the engine.
2. Remove the belt cover from the left side of the tiller by removing the two self-tapping screws and hex stop nut and washer. See Fig. 7–1.

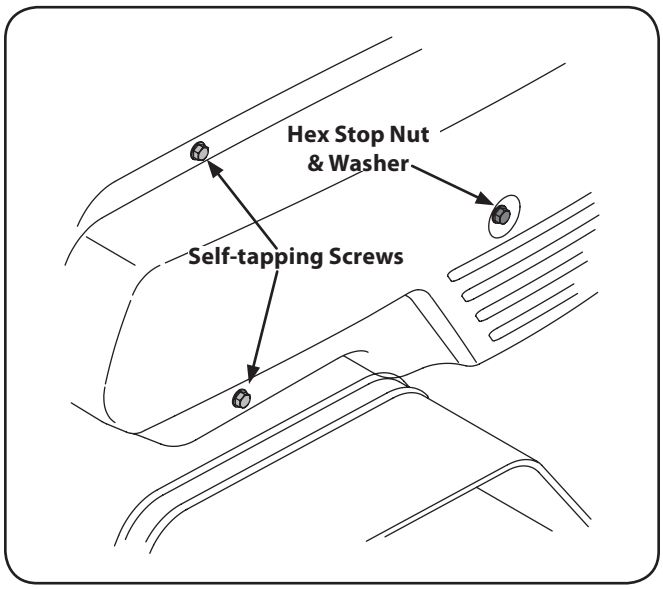

Figure 7-1

3. Remove belt from transmission pulley and then from around the reverse idler pulley. See Fig. 7–2.

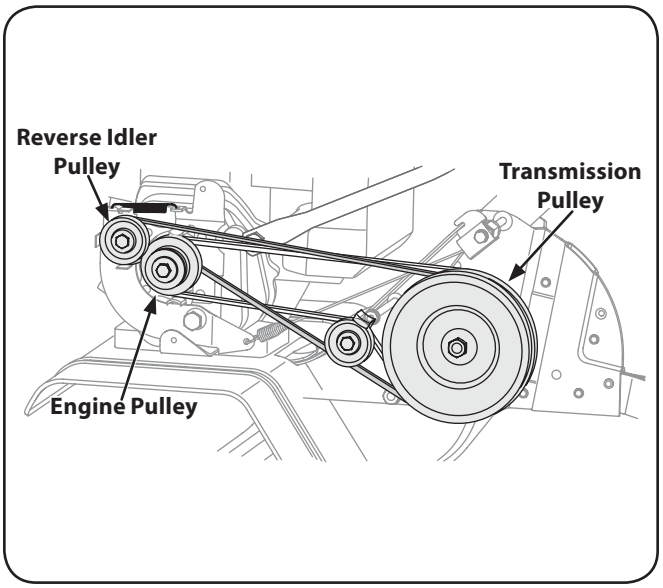

Figure 7-2

4. To reassemble the new belt, follow the instructions in reverse order. Be sure to place the wider side of the belt against transmission and idler pulley while slimmer side goes over the engine pulley. See Fig. 7–2.

   NOTE: Upon reassembly, make certain the belt is routed over the idler pulley and inside of belt keepers by engine pulley. See Fig. 7–2.

Forward Drive Belt

1. Remove the reverse drive belt as instructed in the previous section.
2. Remove the return spring. See Fig. 7–3.

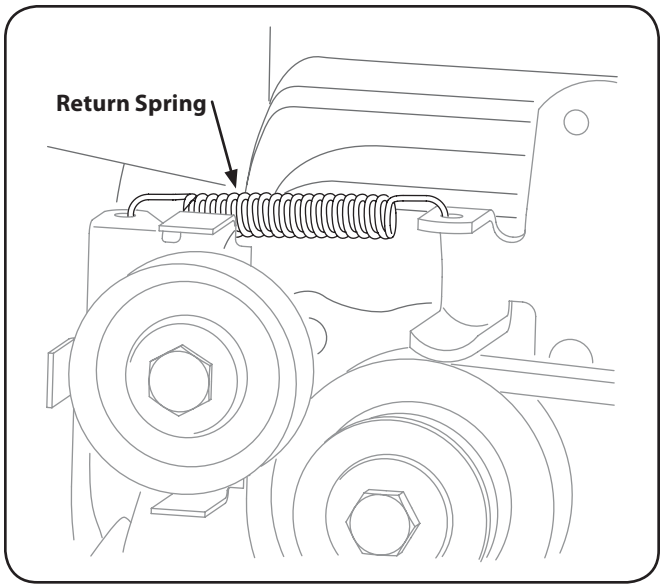

Figure 7-3

3. Remove the idler pulley bolt and move the belt from under the idler pulley keeper. See Fig. 7–4.

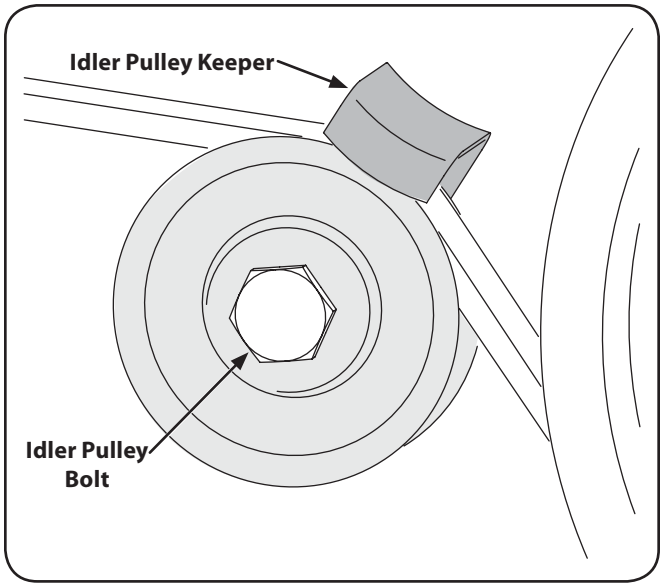

Figure 7-4

4. The forward idler belt will not clear the belt keepers near the engine pulley. You must remove the reverse idler bracket to allow the belt to move off of the engine pulley. Remove the two securing screws and move the bracket toward the transmission pulley. Retain the screws for reassembly. See Fig. 7–5.

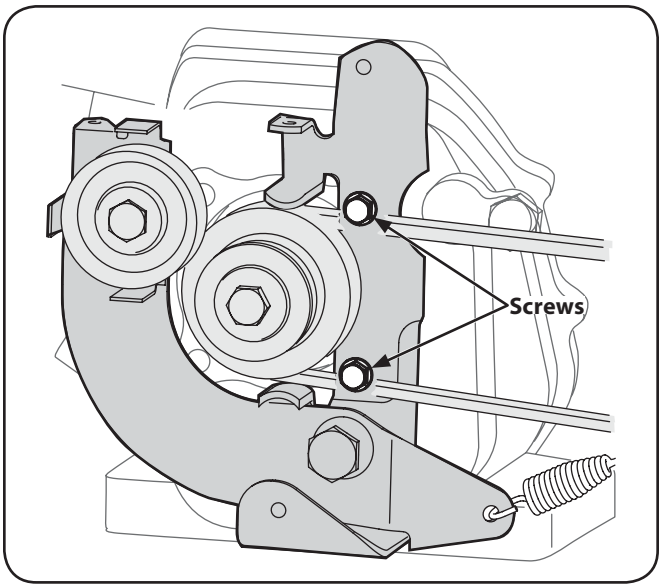

Figure 7-5

5. Remove the belt from the reverse idler pulley and then from around the transmission pulley. See Fig. 7–6.

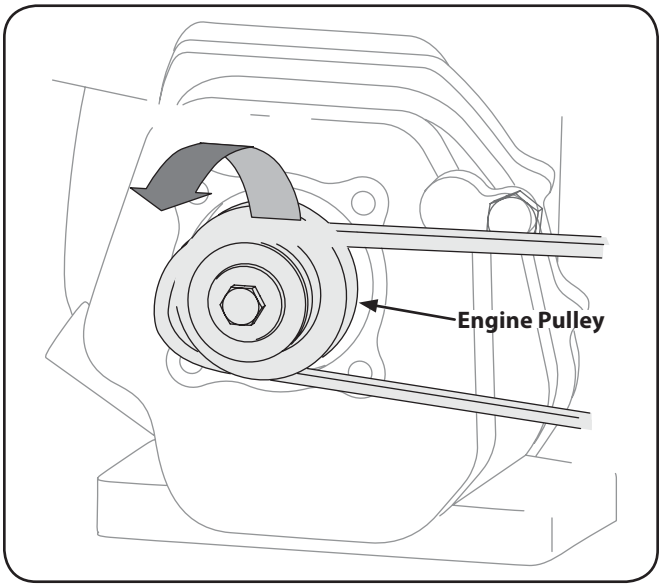

Figure 7-6

6. To reassemble the new belt, follow the instructions in reverse order. Be sure to place the wider side of the belt away from the engine and transmission pulleys.

   NOTE: Upon reassembly, make certain that the idler pulley keeper is as shown in Fig. 7–4. Take note of the notch on the bottom of the keeper and the alignment when reassembling with the replacement belt.

Problem	Cause	Remedy
Tines do not engage	1. Foreign object lodged in tines 2. Tine clevis pin(s) missing 3. Pulley and idler not in correct adjustment 4. Not shifting properly 5. Control cable not adjusted properly 6. Belt worn and/or stretched	1. Dislodge foreign object 2. Replace tine clevis pin(s) 3. Take tiller to authorized service dealer 4. Refer to the Controls & Features Section for proper shifting procedures 5. Adjust control cable 6. Replace belt
Tines skip over ground	1. Improper rotation	1. Forward rotation should only be used on soil that has already been tilled, not on virgin soil
Wheels do not engage	1. Clevis pin missing 2. Tiller is not being shifted properly 3. Control cable not adjusted properly 4. Belt worn and/or stretched	1. Replace clevis pin 2. Refer to Controls & Features Section for proper shifting procedures 3. Adjust control cable 4. Replace belt

Replacement Parts

9

Component	Part Number and Description	
	642-0002 642-0003	Inner Right Hand Tine Inner Left Hand Tine
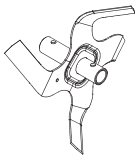	642-0023 642-0024	Outer Left Hand Tine Outer Right Hand Tine
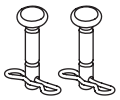	714-04043 911-0415	Cotter Pin Clevis Pin
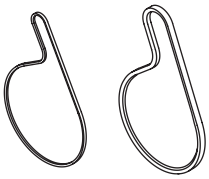	954-0428 954-0429	Forward V-Belt, Reverse V-Belt
	946-0918 746-0953	Forward Cable Reverse Cable
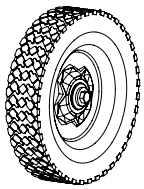	734-1268	Wheels, 8” x 1.75”

NOTE: Download a complete Parts Manual, refer to customer support on page 2. Be sure to have your model number and serial number ready. Refer to page 2 for more information regarding locating your model and serial numbers.

For equipment purchased in Canada only.

THREE YEAR LIMITED WARRANTY

The limited warranty set forth below is given by MTD Products Limited with respect to new merchandise purchased and used in Canada and/or its territories and possessions (either entity respectively, "MTD").

MTD warrants this product (excluding its normal wear parts as described below) against defects in material and workmanship for a period of three (3) years commencing on the date of original purchase and will, at its option, repair or replace, free of charge, any part found to be defective in materials or workmanship. This limited warranty shall only apply if this product has been operated and maintained in accordance with the Operator's Manual furnished with the product, and has not been subject to misuse, abuse, commercial use, neglect, accident, improper maintenance, alteration, vandalism, theft, fire, water, or damage because of other peril or natural disaster. Damage resulting from the installation or use of any part, accessory or attachment not approved by MTD for use with the product(s) covered by this manual will void your warranty as to any resulting damage.

Normal wear parts are warranted to be free from defects in material and workmanship for a period of thirty (30) days from the date of purchase. Normal wear parts include, but are not limited to items such as: batteries, belts, blades, blade adapters, grass bags, rider deck wheels, seats, snow thrower skid shoes, friction wheels, shave plates, auger spiral rubber, tires, engine oil, air filters and spark plugs.

HOW TO OBTAIN SERVICE: Warranty service is available, WITH PROOF OF PURCHASE, through your local authorized service dealer. To locate the dealer in your area;

In the U.S.A.: Check your Yellow Pages, or contact MTD LLC at P.O. Box 361131, Cleveland, Ohio 44136-0019, or call 1-800-800-7310 or 1-330-220-4683 or log on to our Web site at www.mtdproducts.com.

In Canada: Contact MTD Products Limited, Kitchener, ON N2G 4J1, or call 1-800-668-1238 or log on to our Web site at www.mtdcanada.com.

This limited warranty does not provide coverage in the following cases:

a. The engine or component parts thereof. These items may carry a separate manufacturer's warranty. Refer to applicable manufacturer's warranty for terms and conditions. The Powermore engine is not excluded under this agreement.

b. Log splitter pumps, valves, and cylinders have a separate one-year warranty.

c. Routine maintenance items such as lubricants, filters, blade sharpening, tune-ups, brake adjustments, clutch adjustments, deck adjustments, and normal deterioration of the exterior finish due to use or exposure.

d. Service completed by someone other than an authorized service dealer.

e. MTD does not extend any warranty for products sold or exported outside of Canada, including possessions and territories.

f. Replacement parts that are not genuine MTD parts.

g. Transportation charges and service calls.

h. If Products are used commercially. (MTD may separately offer Limited Commercial Warranties on certain select products. Ask your dealer or retailer for details or contact MTD Service for more information.)

No implied warranty, including any implied warranty of merchantability of fitness for a particular purpose, applies after the applicable period of express written warranty above as to the parts as identified. No other express warranty, whether written or oral, except as mentioned above, given by any person or entity, including a dealer or retailer, with respect to any product, shall bind MTD. During the period of the warranty, the exclusive remedy is repair or replacement of the product as set forth above.

The provisions as set forth in this warranty provide the sole and exclusive remedy arising from the sale. MTD shall not be liable for incidental or consequential loss or damage including, without limitation, expenses incurred for substitute or replacement lawn care services or for rental expenses to temporarily replace a warranted product.

Some jurisdictions do not allow the exclusion or limitation of incidental or consequential damages, or limitations on how long an implied warranty lasts, so the above exclusions or limitations may not apply to you.

In no event shall recovery of any kind be greater than the amount of the purchase price of the product sold. **Alteration of safety features of the product shall void this warranty**. You assume the risk and liability for loss, damage, or injury to you and your property and/or to others and their property arising out of the misuse or inability to use the product.

This limited warranty shall not extend to anyone other than the original purchaser or to the person for whom it was purchased as a gift.

HOW LOCAL LAWS RELATE TO THIS WARRANTY: This limited warranty gives you specific legal rights, and you may also have other rights that vary in different jurisdictions.

IMPORTANT: Owner must present Original Proof of Purchase to obtain warranty coverage.

MTD LLC, P.O. BOX 361131 CLEVELAND, OHIO 44136-0019; Phone: 1-800-800-7310, 1-330-220-4683

MTD Products Ltd., P. O. BOX 1386, KITCHENER, ON N2G 4J1; Phone: 1-800-668-1238

08.08.08

For equipment purchased in United States only.

CONSUMER'S WARRANTY
COLUMBIA OUTDOOR
THREE YEARS- 120 Hrs. LIMITED WARRANTY

For three (3) years-120 hrs. whichever come first, from the date of original purchase of COLUMBIA products, COLUMBIA will either repair or replace, at its option, free of charge, F.O.B. factory or authorized service firm, any part found to be defective in material and workmanship. All transportation charges on parts submitted for replacement under this warranty must be paid by the purchaser unless return is requested by COLUMBIA.

This warranty DOES NOT apply to any part which has become inoperative through misuse, excessive use, accident, neglect, improper maintenance or alterations by unauthorized persons.

This limited warranty does not extend to the replacement of parts which are not defective, but where regular usage has exhausted the life of the part.

TRACTOR ATTACHMENT WARRANTY

Mower decks included with, or sold separately, as an attachment for COLUMBIA garden tractors will be warranted according to the above terms of the COLUMBIA THREE (3) YEARS - 120 hrs. limited consumer warranty.

ALL OTHER ATTACHMENTS will be sold under the same conditions as above except the warranty will be ONE YEAR FROM DATE OF ORIGINAL PURCHASE.

ENGINES, ELECTRIC START KITS, HYDRO-GEAR, PEERLESS TRANSMISSIONS AND PEERLESS TRANSAXLES ARE WARRANTED BY THEIR RESPECTIVE MANUFACTURER. ALL CLAIMS AGAINST THESE COMPONENTS MUST BE HANDLED THROUGH THE RESPECTIVE MANUFACTURERS SERVICE DEALERS.

Belts, light bulbs, clutch parts (friction wheels), grass bags, tires, seats, rider deck wheels and cutting blades are covered by a 60 day limited warranty.

Batteries are warranted against defect for 90 days at 100% of their value and 50% of their value for the period between the 91st day and the 120th day.

Fuses, shear bolts and blade adapters are considered consumable items and as such are not warranted.

Note: Regular maintenance replacement parts and related inspections and adjustments are excluded from coverage when made as part of normal maintenance service.

EXTERIOR FINISH

NORMAL DETERIORATION OF THE EXTERIOR FINISH DUE TO USE OR EXPOSURE TO THE ELEMENTS, CORROSIVE PRODUCTS ETC… IS NOT WARRANTED. LABELS ARE COVERED FOR 1 YEAR FROM THE ORIGINAL DATE OF PURCHASE.

PERSONAL USE

THE FOREGOING PARAGRAPHS CONSTITUTE COLUMBIA'S ENTIRE WARRANTY WITH RESPECT TO ANY PRODUCT PURCHASED AND USED FOR PERSONAL, FAMILY, HOUSEHOLD/RESIDENTIAL PURPOSES, AS DISTINGUISHED FROM COMMERCIAL USAGE.

COMMERCIAL USE

ALL APPLICATIONS OTHER THAN PERSONAL USE AS OUTLINED ABOVE, ARE CONSIDERED COMMERCIAL USAGE.

COLUMBIA products purchased by a company or used for commercial purposes are not covered by any warranty.

WARRANTY SERVICE CAN ONLY BE PERFORMED BY AN AUTHORIZED COLUMBIA SERVICE DEALER. ANY NON-ORIGINAL EQUIPMENT REPLACEMENT PART USED ON OR IN A PRODUCT UNDER WARRANTY WILL BE EXCLUDED FROM THAT WARRANTY COVERAGE, AS WILL BE ANY RELATED DAMAGED COMPONENTS RESULTING FROM THE INSTALLATION OF A NON-COLUMBIA REPLACEMENT PART.

MTD LLC, P.O. BOX 361131 CLEVELAND, OHIO 44136-0019; Phone: 1-800-800-7310, 1-330-220-4683

1.07.10

Notes